1005-2-11 Optional Remote Activated Flow Control

Ref	Part No.	Description	Parts – Assembly	Will Fit SN	Remarks
0	EL-0007	Actuator Control Box, Single	0		
0	EL-0008	Actuator Control Box, Double	0		
1	KIT-0066	R.A.F.C.for flow controls mounted	0		Use universal Kit. KIT-0087
2	KIT-0087	Universal Remote Activated Flow Control	0		
3	ELC-042-17	Actuator Cable Only 17'	0		
4	ACT-042-2	Actuator, Wired for Any Length Harness, Fits All	0		
5	ELC-0009	Actuator Cord, Control Box-#1 Junction Box	0		
5	ELC-0010	Actuator Cord, Control Box-#1 Junction Box, Long	0		
6	ELE-0014	Actuator, Main Junction Box	0		
800	EL-16057	Replacement Coupling Ring	1	EL-60371	
801	ELE-0009	Elec. Schematic, Actuator Kit, Front F. C. Panel	0	Tomato & Cucumber	Single actuator: Front Flow Control Panel
802	ELE-0010	Elec. Schematic, Actuator Kit, Front F. C. Panel (Multi-)	0	Tomato & Cucumber	Multiple actuators: Front F.C. panel. ACT-042-2 and/or ACT-042-17
803	ELE-0011	Elec. Schematic, Actuator Kit, "Middle" F.C. Panel Tom&Cuc	0	Tomato & Cucumber	Single actuator: Middle Flow Control panel
804	ELE-0012	Elec. Schematic, Actuator Kit, "Middle" F.C.Panel (Multi-)	0	Tomato & Cucumber	Multiple actuators: Middle F.C. panel. ACT-042-2 and/or ACT-042-17
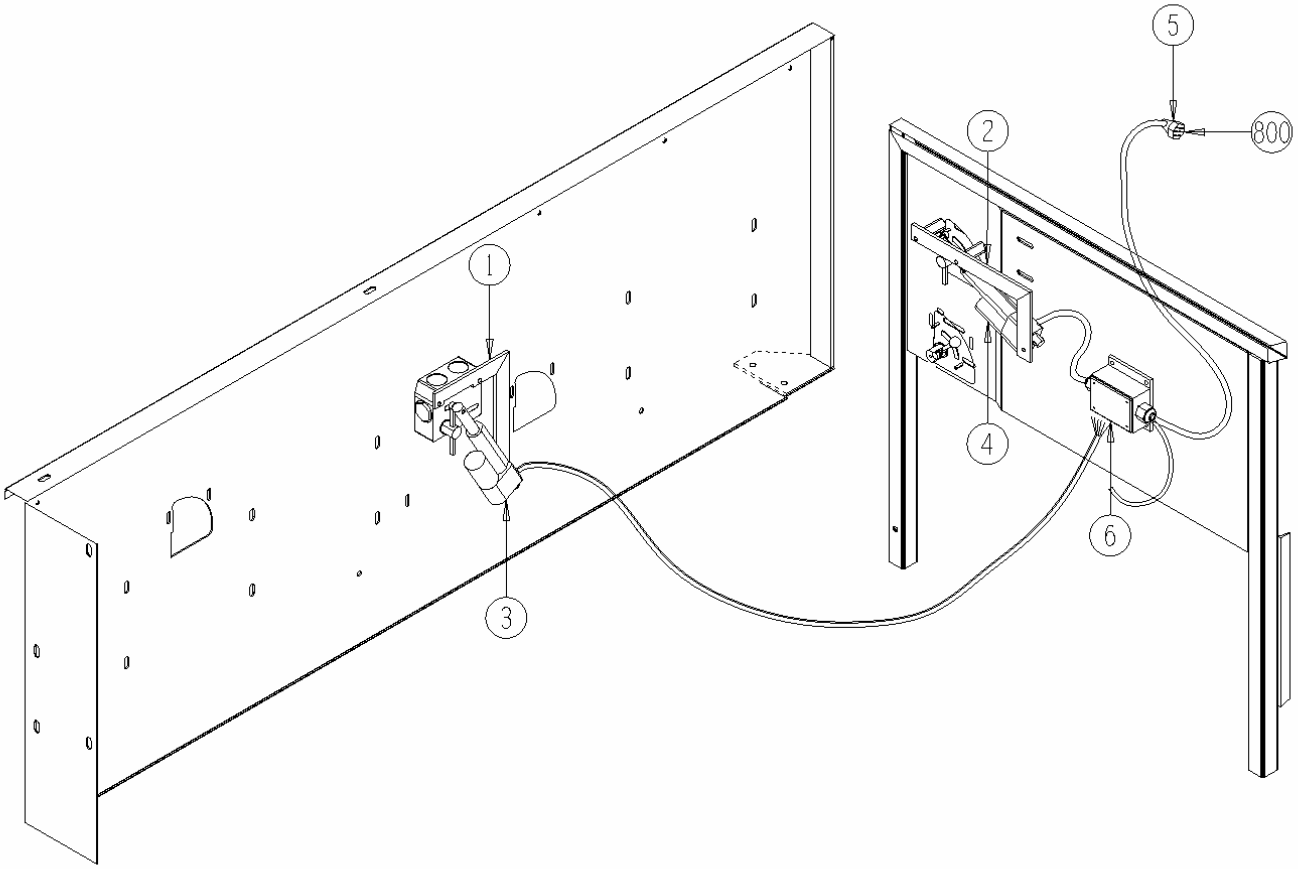
1005-2-11 OPTIONAL REMOTE ACTIVATED FLOW CONTROL